DATASHEET

Technical Data Sheet
1.6mm round Subminiature Side Looking Infrared LED
IR26-61C/L510/R/2G

Features

- Small double-end package
- Low forward voltage
- Good spectral matching to Si photo detector
- Package in 8mm tape on 7″ diameter reel.
- Pb free
- The product itself will remain within RoHS compliant version.
- Compliance with EU REACH.
- Compliance Halogen Free .(Br <900 ppm ,Cl <900 ppm , Br+Cl < 1500 ppm)

Description

- IR26-61C/L510/R/2G is an infrared emitting diode in miniature SMD package which is molded in a water clear plastic with spherical top view lens. The device is spectrally matched with silicon photodiode and phototransistor

Applications

- Infrared applied system

Device Selection Guide

Device No.	Chip Material	Lens Color
IR26-61C/L510/R/2G	GaAlAs	Water Clear

Copyright © 2010, Everlight All Rights Reserved. Release Date : Mar.28.2018. Issue No: DIR-0001944 Rev.1

Package Dimensions

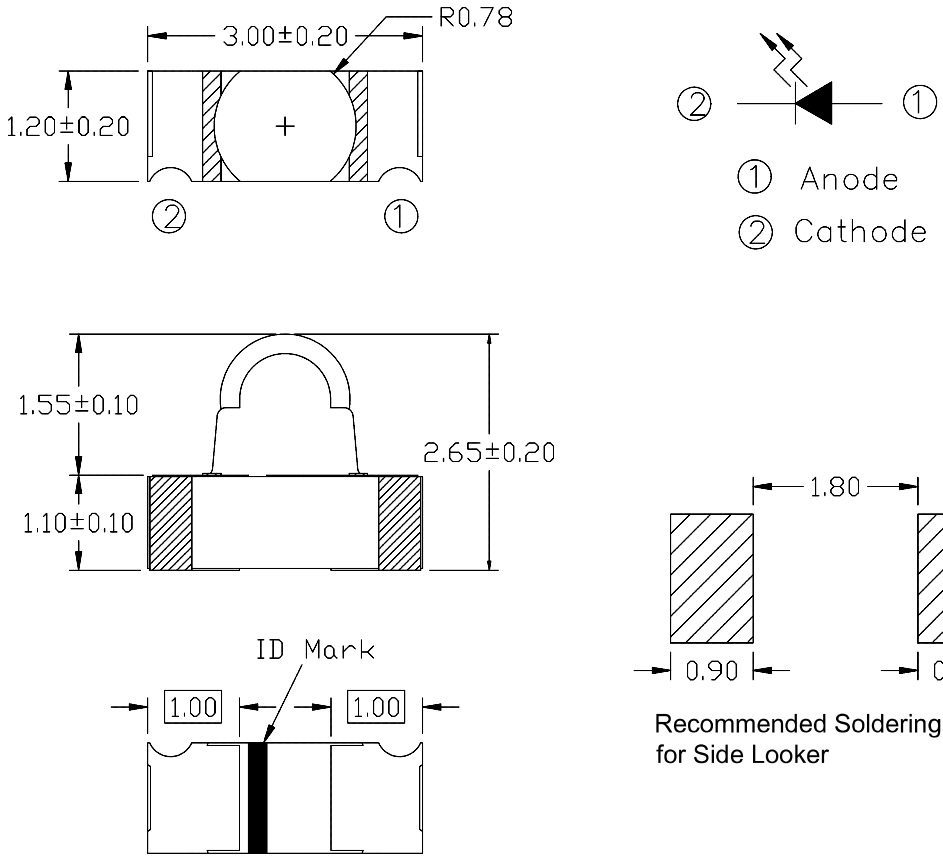

Recommended Soldering Pattern
for Side Looker

Notes: 1.All dimensions are in millimeters
2.Tolerances unless dimensions ±0.1mm

Absolute Maximum Ratings (Ta=25℃)

Parameter	Symbol	Rating	Unit
Continuous Forward Current	I_F	50	mA
Peak Forward Current *1	I_{FP}	500	mA
Reverse Voltage	V_R	5	V
Operating Temperature	T_{opr}	-40 ~ +100	°C
Storage Temperature	T_{stg}	-40 ~ +100	°C
Soldering Temperature *2	T_{sol}	260	°C
Power Dissipation at(or below) 25℃ Free Air Temperature	P_c	100	mW

Notes: *1: I_{FP} Conditions--Pulse Width≦100 μs and Duty≦1%.
***2: Soldering time≦5 seconds.**

Copyright © 2010, Everlight All Rights Reserved. Release Date : Mar.28.2018. Issue No: DIR-0001944 Rev.1

Electro-Optical Characteristics (Ta=25℃ unless specified otherwise)

Parameter	Symbol	Min.	Typ.*	Max.	Unit	Condition
Radiant Intensity	I_E	10.0	24.0	--	mW/sr	I_F=20mA
		40	--	90	mW/sr	I_F=70mA, tp=20mS
Peak Wavelength	λ_p	--	940	--	nm	I_F=20mA
Spectral Bandwidth	$\Delta\lambda$	--	30	--	nm	I_F=20mA
Forward Voltage	V_F	--	1.20	1.50	V	I_F=20mA
			1.30	1.60	V	I_F=70mA, tp=20mS
Reverse Current	I_R	--	--	10	μA	V_R=5V
View Angle	$2\theta_{1/2}$	--	20	--	Deg.	I_F=20mA

Copyright © 2010, Everlight All Rights Reserved. Release Date : Mar.28.2018. Issue No: DIR-0001944 Rev.1

Typical Electrical/Optical/Characteristics Curves

Forward Current vs. Ambient Temperature

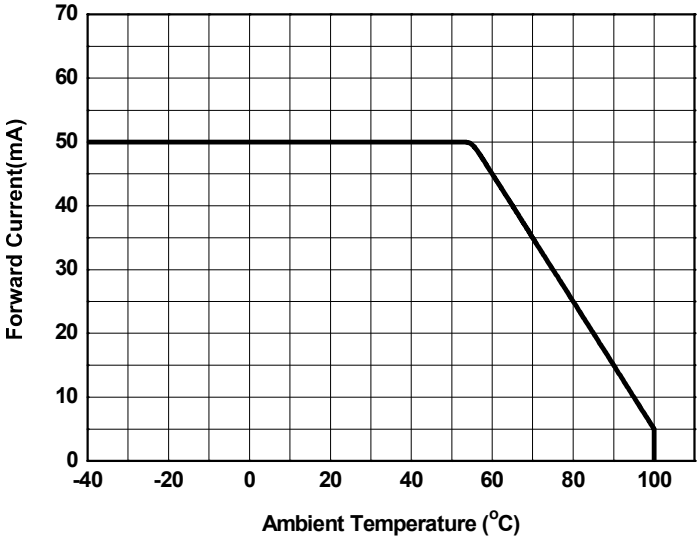

Spectral Distribution

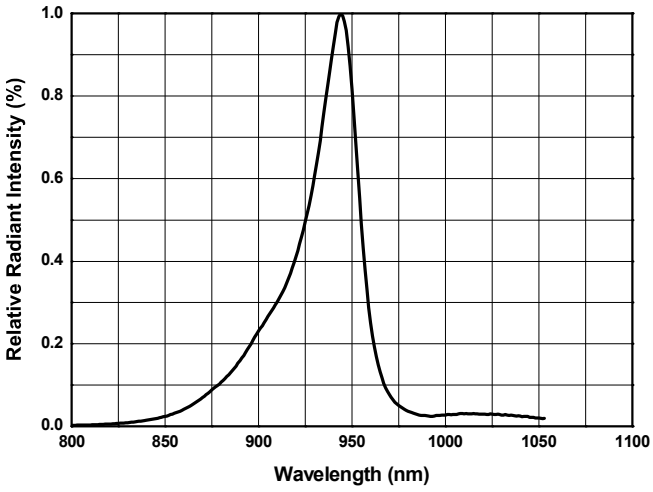

Radiant Intensity vs. Forward Current

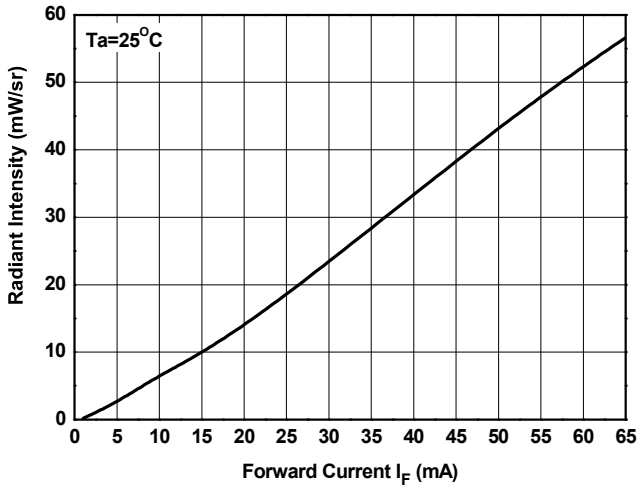

Forward Current vs. Forward Voltage

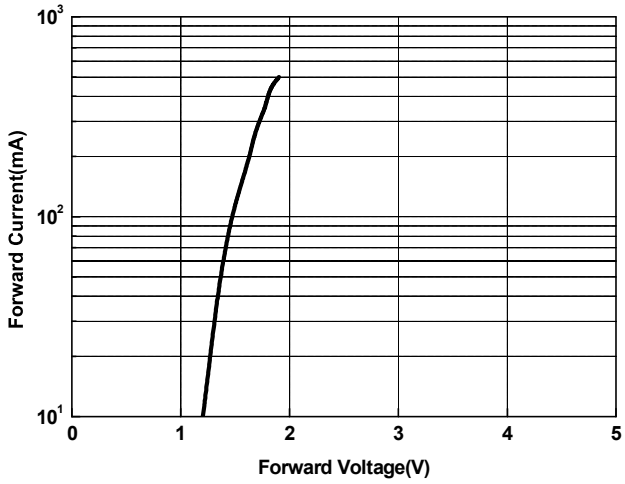

Copyright © 2010, Everlight All Rights Reserved. Release Date : Mar.28.2018. Issue No: DIR-0001944 Rev.1

Relative Radiant Intensity vs. Angular Displacement

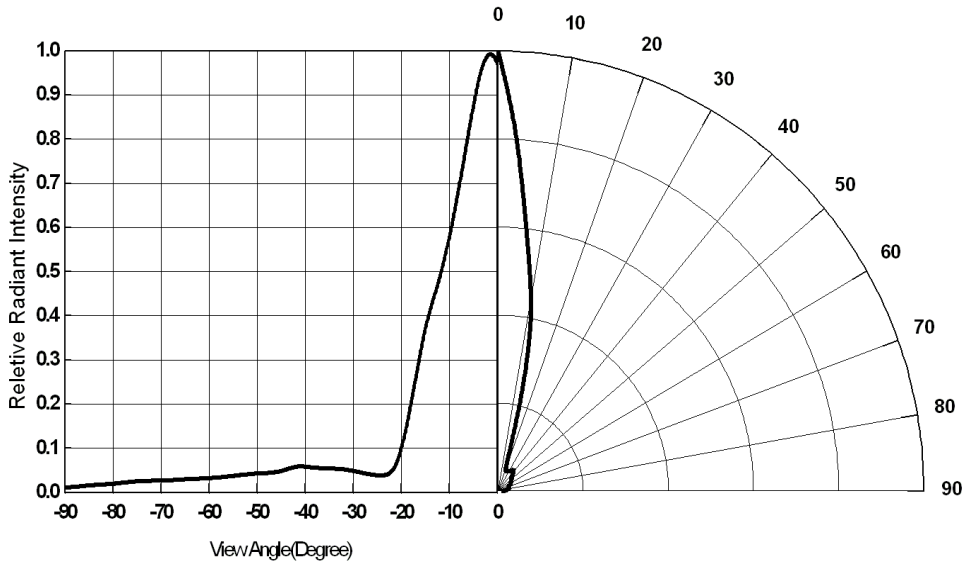

Copyright © 2010, Everlight All Rights Reserved. Release Date : Mar.28.2018. Issue No: DIR-0001944 Rev.1

Precautions For Use

1. Over-current-proof

   Customer must apply resistors for protection , otherwise slight voltage shift will cause big

   current change (Burn out will happen).

2. Storage
   2.1 Do not open moisture proof bag before the products are ready to use.
   2.2 Before opening the package, the LEDs should be kept at 30℃ or less and 60%RH or less.
   2.3 The LEDs should be used within a year.
   2.4 After opening the package, the LEDs should be kept at 30℃ or less and 60%RH or less.
   2.5 The LEDs should be used within 168 hours (7 days) after opening the package
   2.6 If the moisture absorbent material (silica gel) has faded away or the LEDs have exceeded the storage time, baking treatment should be performed using the following conditions.
   Baking treatment : 60±5℃ for Min. 24 hours.

3. Soldering Condition
   3.1 Pb-free solder temperature profile

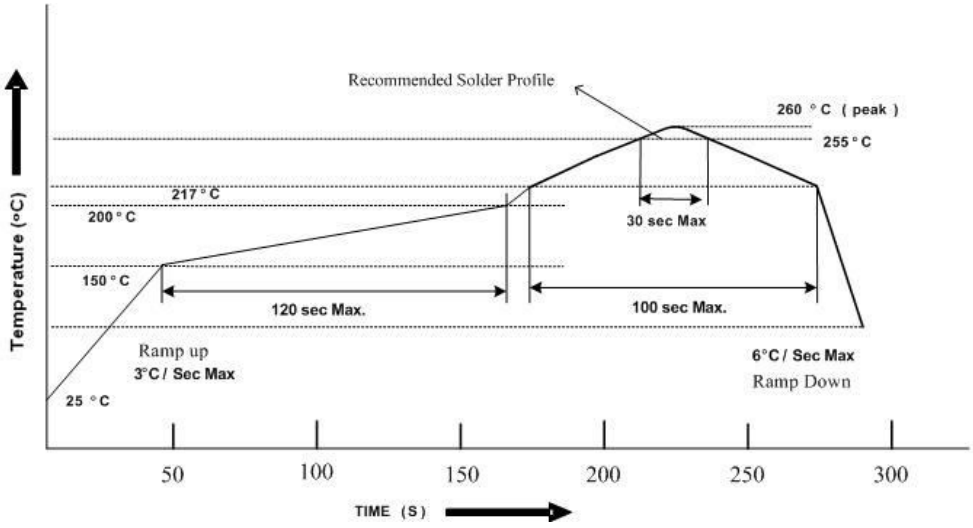

   3.2 Reflow soldering should not be done more than two times.
   3.3 When soldering, do not put stress on the LEDs during heating.
   3.4 After soldering, do not warp the circuit board.

Copyright © 2010, Everlight All Rights Reserved. Release Date : Mar.28.2018. Issue No: DIR-0001944 Rev.1

4. Soldering Iron

Each terminal is to go to the tip of soldering iron temperature less than 350℃ for 3 seconds within once in less than the soldering iron capacity 25W. Leave two seconds and more intervals, and do soldering of each terminal. Be careful because the damage of the product is often started at the time of the hand solder.

5. Repairing

Repair should not be done after the LEDs have been soldered. When repairing is unavoidable, a double-head soldering iron should be used (as below figure). It should be confirmed beforehand whether the characteristics of the LEDs will or will not be damaged by repairing.

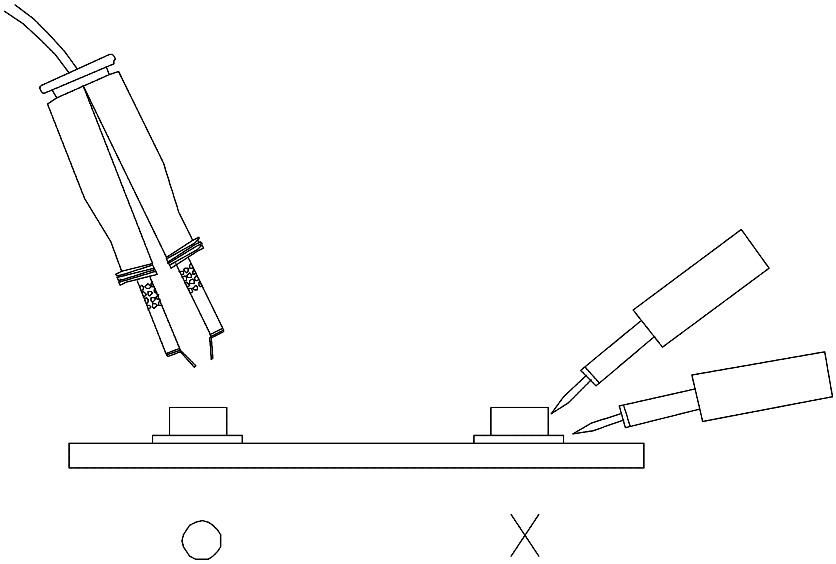

Copyright © 2010, Everlight All Rights Reserved. Release Date : Mar.28.2018. Issue No: DIR-0001944 Rev.1

Package Dimensions

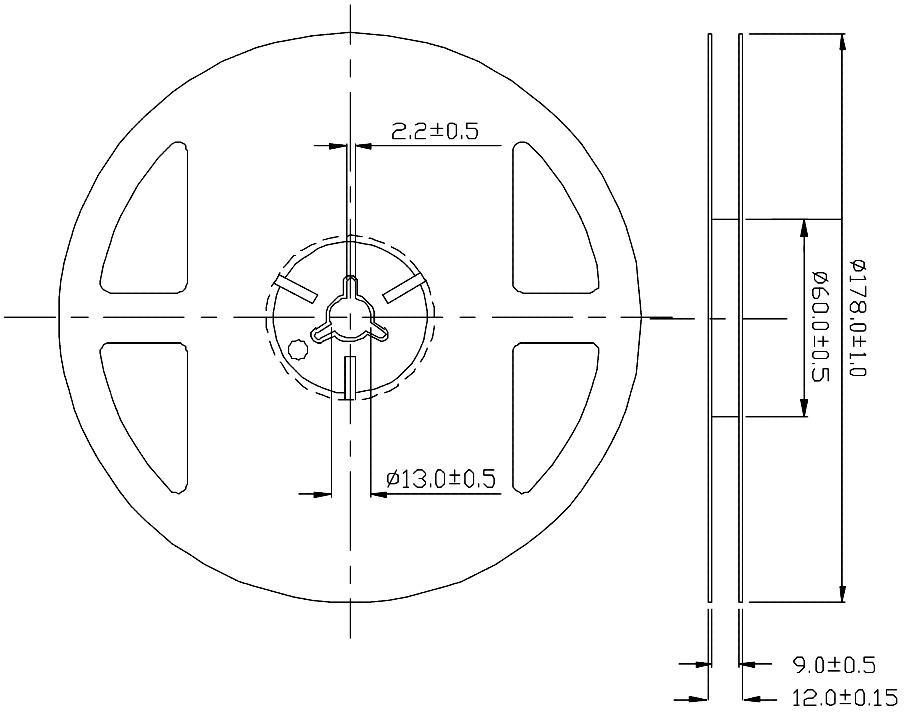

Note: The tolerances unless mentioned is ±0.1mm ,Unit = mm

Carrier Tape Dimensions:(Quantity: 1500pcs/reel)

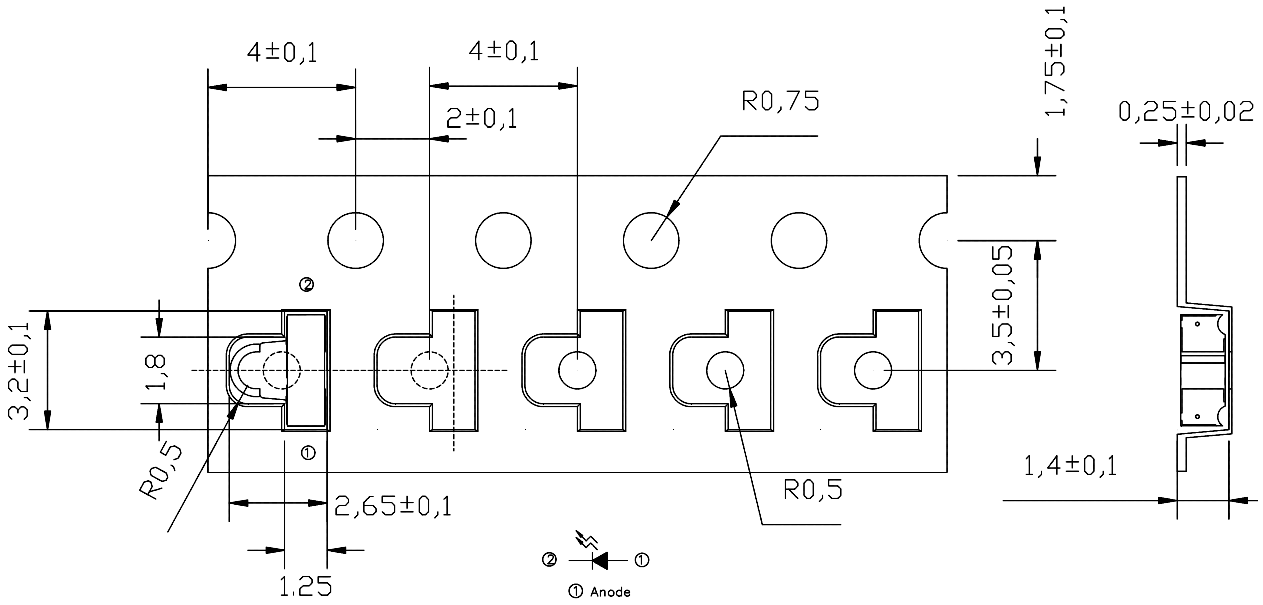

Note: The tolerances unless mentioned is ±0.1mm ,Unit = mm

Copyright © 2010, Everlight All Rights Reserved. Release Date : Mar.28.2018. Issue No: DIR-0001944 Rev.1

Packing Procedure

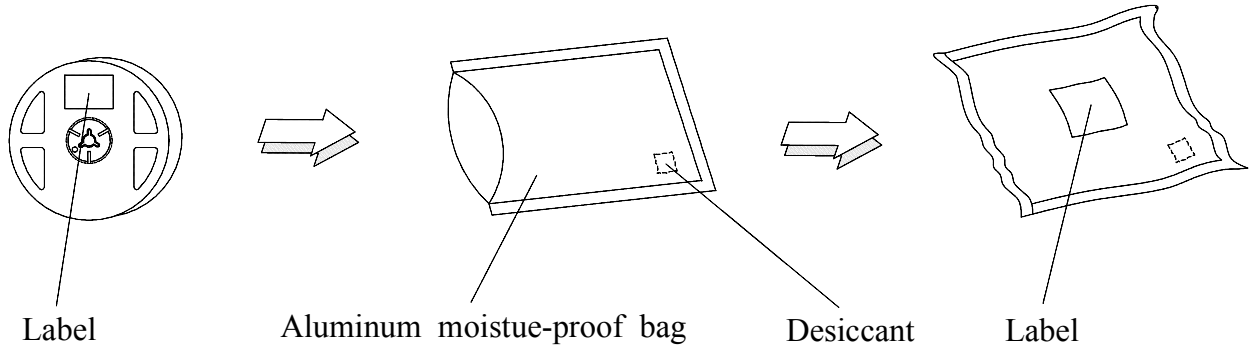

Label Form Specification

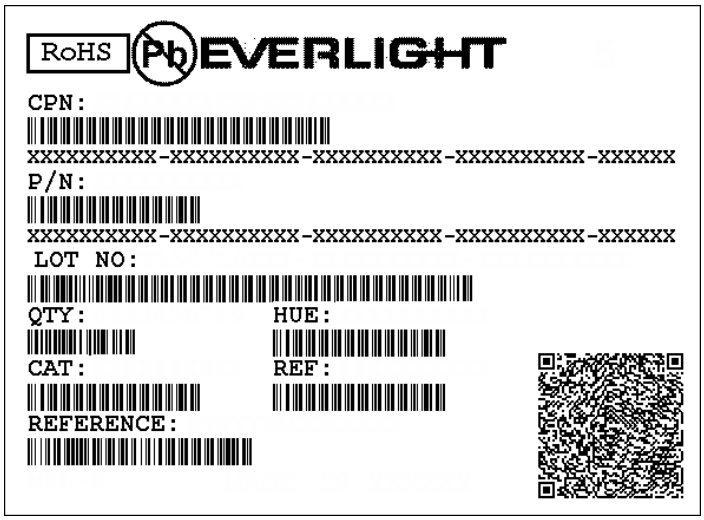

CPN: Customer's Production Number
P/N : Production Number
QTY: Packing Quantity
CAT: Ranks
HUE: Peak Wavelength
REF: Reference
LOT No: Lot Number
MADE IN TAIWAN: Production Place

DISCLAIMER

1. EVERLIGHT reserves the right(s) on the adjustment of product material mix for the specification.
2. The product meets EVERLIGHT published specification for a period of twelve (12) months from date of shipment.
3. The graphs shown in this datasheet are representing typical data only and do not show guaranteed values.
4. When using this product, please observe the absolute maximum ratings and the instructions for using outlined in these specification sheets. EVERLIGHT assumes no responsibility for any damage resulting from the use of the product which does not comply with the absolute maximum ratings and the instructions included in these specification sheets.
5. These specification sheets include materials protected under copyright of EVERLIGHT. Reproduction in any form is prohibited without obtaining EVERLIGHT's prior consent.
6. This product is not intended to be used for military, aircraft, automotive, medical, life sustaining or life saving applications or any other application which can result in human injury or death. Please contact authorized Everlight sales agent for special application request.

Copyright © 2010, Everlight All Rights Reserved. Release Date : Mar.28.2018. Issue No: DIR-0001944 Rev.1